Technical data 208F

Brake:

- Brake with 2-circles, oil-cooled multiple-disc power-brake
- Spring accumulator – parking brake

Steering:

- Articulated frame steering with 2 cylinders
- Steering angle 45°

Cabin:

- Raisable to side on parallel linkages
- ROPS, FOPS, OPS tested
- Rotary seat with pedals in front and rear
- Wiper in front and rear, optional on the side
- Air cushioned seat with seat heating
- Hot-water heating
- Air conditioning

Electrics / Instruments:

- HSM Ecommand colour-display
- 5 operator programs + factory setting
- Diagnosis-tool and error-indication
- Graphic support at parameter editing
- Generator 110 A (28 V)
- 2 service-free dry batteries á 75 Ah

Power train:

- NAF 2 speed transfer gearbox
- HSM High Speed Drive (series 71); speed at 1st gear 0-14 km/h

Standard equipment:

- 14 LED-working headlight at cabin
- 4 working headlights at crane
- Potential transformer 24 V - 12 V
- Radio with CD
- Fire extinguisher
- First aid kit
- Warning triangle
- Tool kit
- Cooling box
- Reversing camera with color monitor
- Rear headlights
- Twist lock with 2 hydraulic cylinders

Special equipment:

- Front dozer-blade
- Tandem axle lift (Bogie lift) front
- Turnable rung
- Last rung plugged
- Tiltable crane
- Quick-change system for rungs
- Clambunk
- Auxiliary heating
- Bogie-tracks
- Radio control for winch
- Drive by radio
- Sun blinds
- Pluggable front grid
- Cab suspension HCS
- Crane tip control xyControl (Epsilon crane only)
- Other accessories on request

Specified heights are minimum transport heights for standard equipment.

208F 4 cylinder

Engine:

- VOLVO PENTA
  TAD581VE EU Stage V

Power:	129 kW (175 HP) from 1700 rpm
Max. revolution:	800 Nm from 1100 - 1500 rpm
Max. torque:	816 Nm at 1380 rpm
Displacement:	5,13 liters

Optional: from 208F 10 t

- VOLVO PENTA
  TAD583VE EU Stage V

Power:	175 kW (238 HP) from 1750 rpm
Max. revolution:	947 Nm from 1200 - 1750 rpm
Max. torque:	969 Nm at 1380 rpm
Displacement:	5,13 liters

Hydraulic system:

- Load sensing
- Variable pump (working pump):
  flow rate: 304 l/min at 1600 rpm
  pressure: up to max. 350 bar
- Hydraulic oil: saturated synthetic ester
  Panolin HLP SYNTH with Kleenoil
  microfiltration; WGK 1

Tank capacity:

Diesel:	170 l
AdBlue:	25 l
Hydraulic oil:	130 l

208F 6 cylinder

Engine:

- VOLVO PENTA
  TAD881VE EU Stage V

Power:	185 kW (252 HP) from 1600 rpm
Max. revolution:	1150 Nm from 1100 - 1500 rpm
Max. torque:	1175 Nm at 1400 rpm
Displacement:	7,7 liters

Optional:

- VOLVO PENTA
  TAD882VE EU Stage V

Power:	210 kW (286 HP) from 1700 rpm
Max. revolution:	1225 Nm from 1100 - 1600 rpm
Max. torque:	1255 Nm at 1400 rpm
Displacement:	7,7 liters

Hydraulic system:

- Load sensing
- Variable pump (working pump):
  flow rate: 304 l/min from 1600 rpm
  pressure: up to max. 350 bar
- Hydraulic oil: saturated synthetic ester
  Panolin HLP SYNTH with Kleenoil
  microfiltration; WGK 1

Tank capacity:

	11 t / 12 t	14 t
Diesel:	190 l	225 l
AdBlue:	45 l	45 l
Hydraulic oil:	130 l	130 l

208F 7 t

4 cylinder

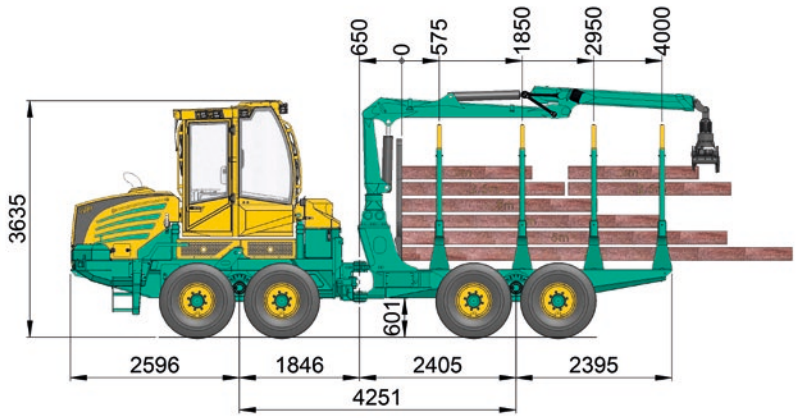

Weight:

- 13.900 kg (series)
  Weight distribution: front axle: 60 %
  rear axle: 40 %

Tyres:

	Width:	Overall width:	Width for tracks:
▪ Series:	600/50-22,5	2300 mm	2400 mm
▪ Optional:	650/45-22,5	2400 mm	2500 mm
	710/40-22,5	2500 mm	2600 mm

Axles:

- NAF portal-bogie-axles
- Front: switchable differential lock 100 %
- Rear: switchable differential lock 100 %

Crane:

- Series: Epsilon C60 F69
- For further cranes see crane brochure

Tank capacity:

- Diesel: 150 l
- AdBlue: 25 l
- Hydraulic oil: 110 l

Loading area:

- 4 rungs
- Length: 4000 mm
- Cross section: 2,9 m², optional: 3,3 m²
- Load capacity: 7 t

208F 9 t

4 cylinder

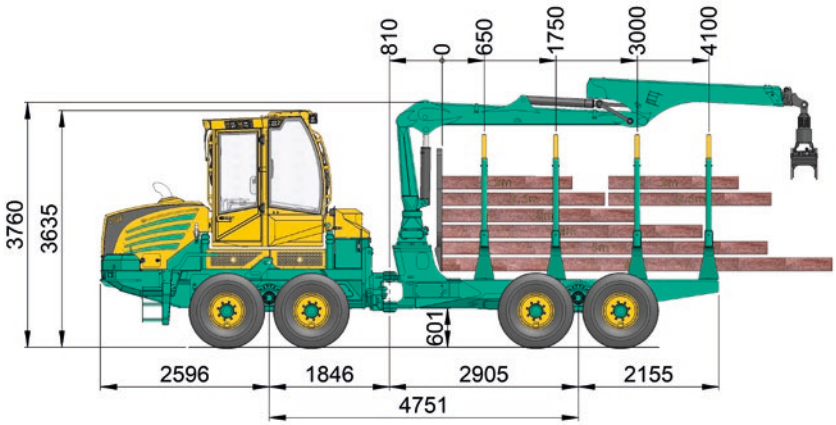

Weight:

- 14.800 kg (series)
  Weight distribution: front axle: 60 %
  rear axle: 40 %

Tyres:

	width:	overall width:	width for tracks:
▪ Series:	710/40-22,5	2500 mm	2600 mm
▪ Optional:	600/50-22,5	2300 mm	2400 mm
	650/45-22,5	2400 mm	2500 mm

Axles:

- NAF portal-bogie-axles
- Front: switchable differential lock 100 %
- Rear: switchable differential lock 100 %

Crane:

- Series: Epsilon M70 F80
- For further cranes see crane brochure

Tank capacity:

- Diesel: 150 l
- AdBlue: 25 l
- Hydraulic oil: 110 l

Loading area:

- 4 rungs
- Length: 4100 mm
- Cross section: 3,6 m², optional: 3,9 m²
- Load capacity: 9 t

208F 10 t

4 cylinder

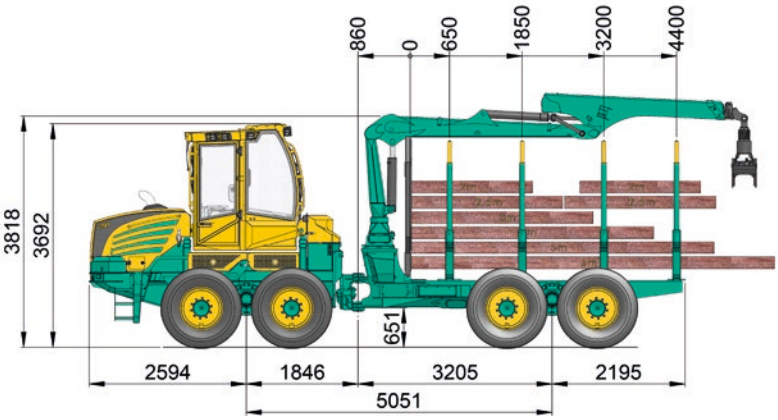

Weight:

- from 17.200 kg
  Weight distribution: front axle: 60 %, rear axle: 40 %

Tyres:

	Width:	Overall width:	Width for tracks:
▪ Series:	710/45-26,5	2600 mm	2700 mm
▪ Optional:	600/55-26,5	2400 mm	2500 mm
	800/40-26,5	2700 mm	2800 mm
	870/40-26,5	2900 mm	3000 mm
	54x37-25	2900 mm	3000 mm

Axles:

- NAF portal-bogie-axles
- Front: switchable differential lock 100 %
- Rear: switchable differential lock 100 %

Crane:

- Series: Epsilon M70 F80
- For further cranes see crane brochure

Loading area:

- 4 rungs
- Length: 4400 mm
- Cross section: 4,0 m² / Option 4,3 m²
- Load capacity: 10 t

208F 11 t

6 cylinder

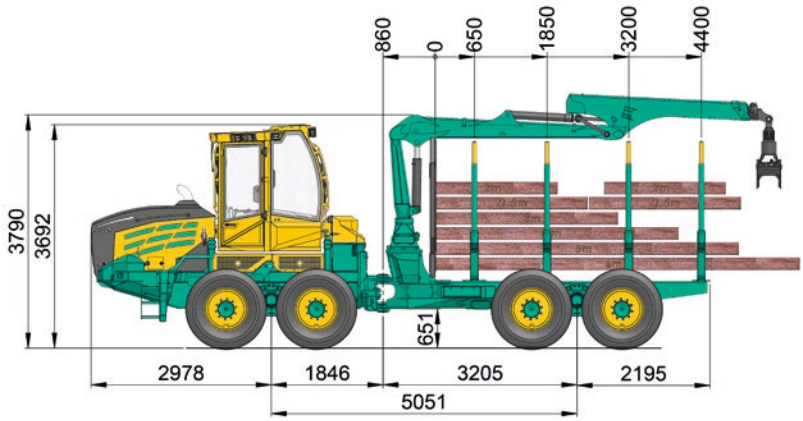

Weight:

- from 17.800 kg
  Weight distribution: front axle: 60 %, rear axle: 40 %

Tyres:

	Widht:	Overall Widht:	Width for tracks:
▪ Series:	710/45-26,5	2600 mm	2700 mm
▪ Optional:	600/55-26,5	2400 mm	2500 mm
	800/40-26,5	2700 mm	2800 mm
	870/40-26,5	2900 mm	3000 mm
	54x37-25	2900 mm	3000 mm

Axles:

- NAF portal-bogie-axles
- Front: switchable differential lock 100 %
- Rear: switchable differential lock 100 %

Crane:

- Series: Epsilon M70 F80
- For further cranes see crane brochure

Loading area:

- 4 rungs
- Length: 4400 mm
- Cross section: 4,0 m² / Option 4,3 m²
- Load capacity: 11 t

208F 12 t

6 cylinder

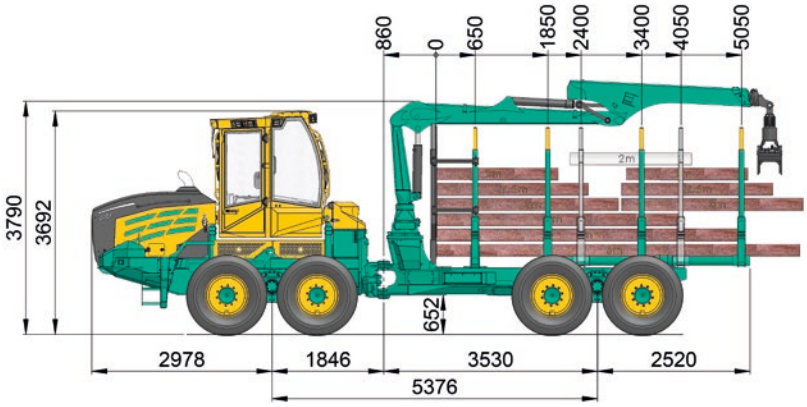

Weight:

- from 18.200 kg
  Weight distribution: front axle: 60 %, rear axle: 40 %

Tyres:

	Width:	Overall width:	Width for tracks:
▪ Series:	710/45-26,5	2600 mm	2700 mm
▪ Optional:	600/55-26,5	2400 mm	2500 mm
	800/40-26,5	2700 mm	2800 mm
	870/40-26,5	2900 mm	3000 mm
	54x37-25	2900 mm	3000 mm

Axles:

- NAF portal-bogie-axles
- Front: switchable differential lock 100 %
- Rear: switchable differential lock 100 %

Crane:

- Series: Epsilon M70 F80
- For further cranes see crane brochure

Loading area:

- 4 rungs, last rung extensible
- Length: 3700 mm - 4650 mm / Option 5050 (2 x 3 m)
- Cross section: 4,0 m² / Option 4,3 m²
- Load capacity: 12 t

208F 14 t

6 cylinder

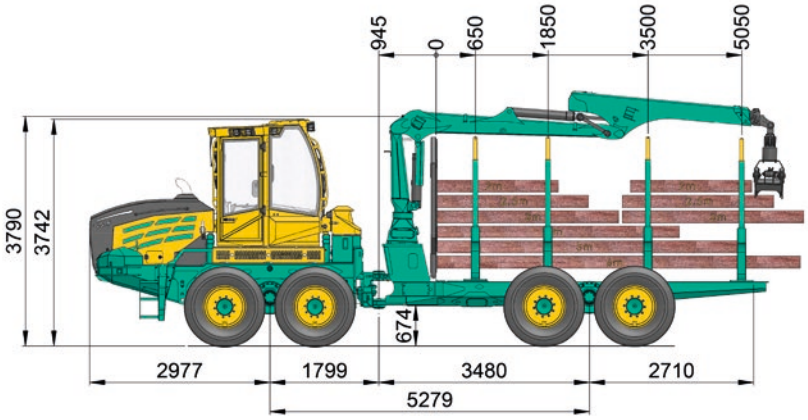

Weight:

- from 18.500 kg
  Weight distribution: front axle: 60 %, rear axle: 40 %

Tyres:

	Width:	Overall Width:	Width for tracks:
▪ Series:	710/45-26,5	2860 mm	2960 mm
▪ Optional:	600/55-26,5	2660 mm	2760 mm
	800/40-26,5	3000 mm	3000 mm

Axles:

- Balanced NAF portal-bogie-axles
- Front: switchable differential lock 100 %
- Rear: switchable differential lock 100 %

Crane:

- Series: Epsilon M70 F80
- For further cranes see crane brochure

Loading area:

- 4 rungs
- Length: 5050 mm
- Cross section: 4,4 m²
- Load capacity: 14 t

208F 9 t Kombi short

4 cylinder

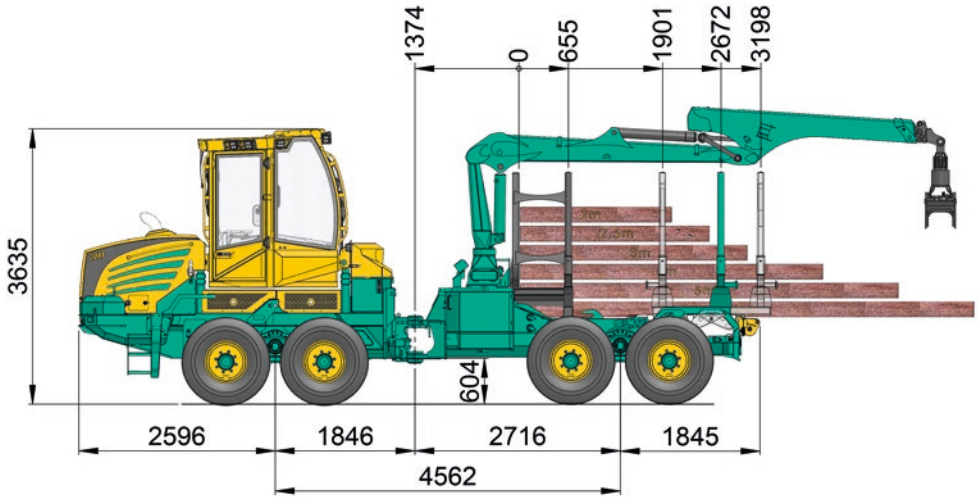

208F 9 t Kombi long

4 cylinder

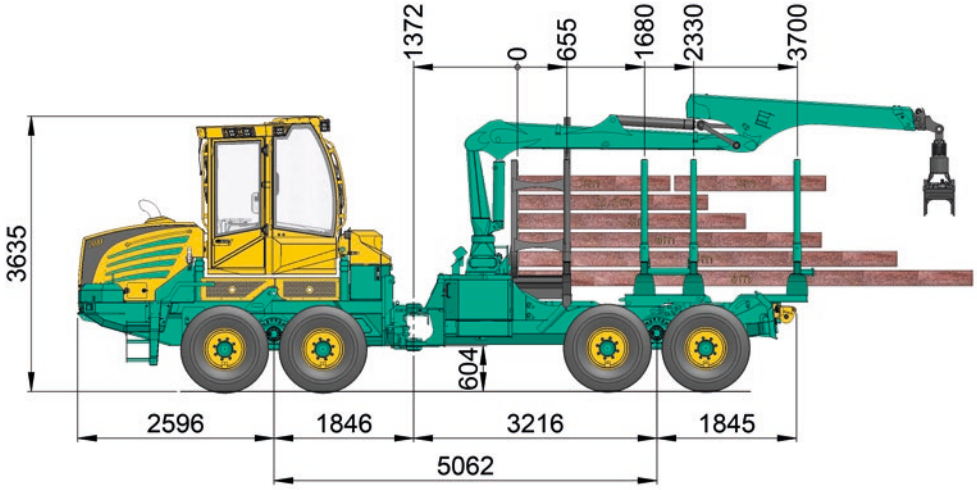

Weight Kombi short / long:

- 15.300 kg / 15.500 kg

Load capacity:

- 9 t

Winches:

- Series: Adler HY 16-SG (2x80 kN) double-drum-winch
  Max. cable take-up 4 mm, 100 m
- Optional: Adler HY 20-SG (2x100 kN) double-drum-winch
  Max. cable take-up 14 mm, 100 m

Crane:

- Series: Epsilon M70 F80
- For further cranes see crane brochure

Tyres:

- Series: 710/40x22,5 min. width: 2550 mm

By using tracks the min. width will change (+100 mm).
Other tyres on request.

Standard equipment:

- Grid and first rung demountable
- Last rung demountable and displaceable to loading length:
  (short) 1,9 m, 2,7 m and 3,2 m
  (long) 2,4 m, 3,1 m and 3,7 m
- Roller-block, high adjustable
- twist lock with hydraulic cylinder
- Cross section 3,25 m^2

Special equipment:

- Rear blade
- Clambunk with quick-change system
- Twin-rung as 2nd and 3rd rung on quick-change system (only Kombi long)
- Turnable rung
- Other accessories on request

208F 10 t Kombi short

4 cylinder

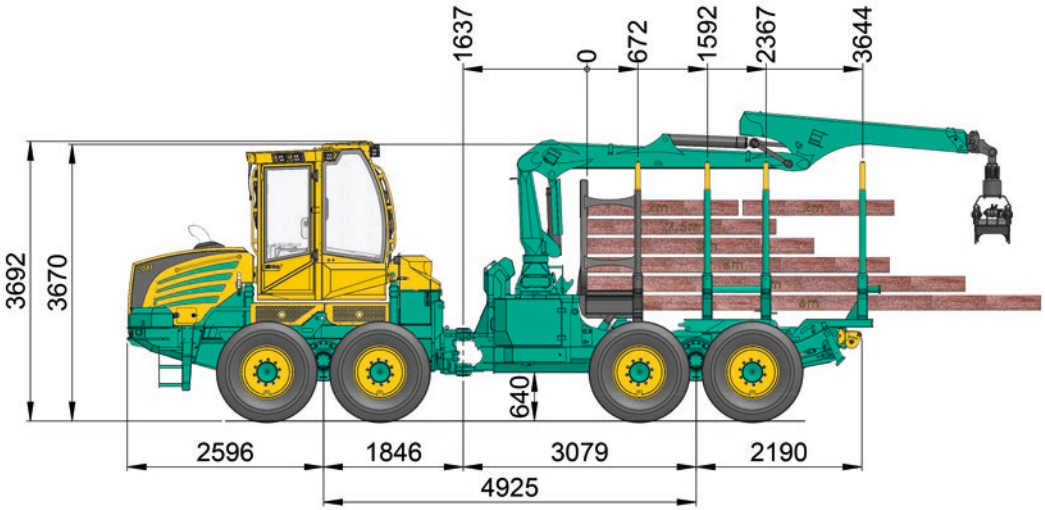

208F 10 t Kombi long

4 cylinder

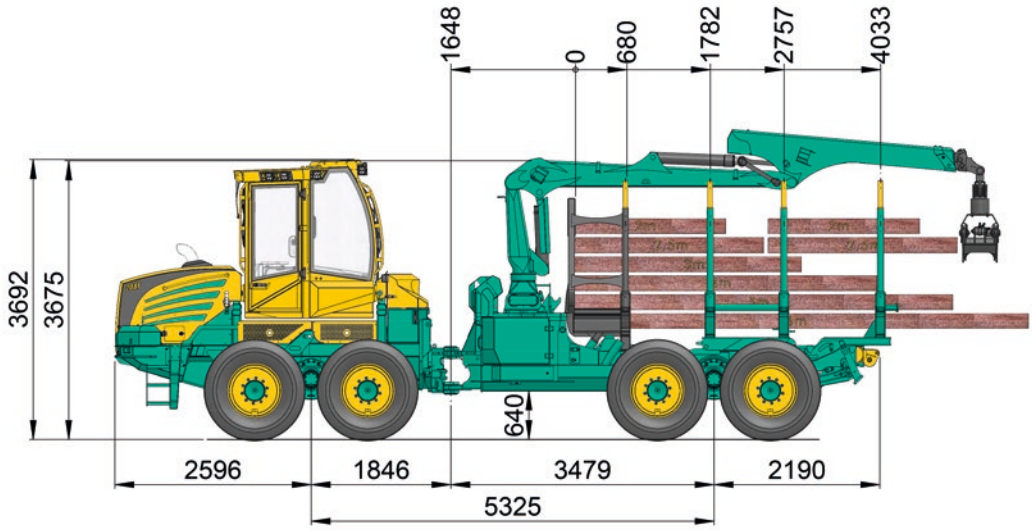

Weight Kombi short / long:

- from 17.700 kg / 17.900 kg

Load capacity:

- 10 t

Winches:

- Serie: Adler HY 20-SG (2x100 kN) double-drum-winch
  Max. cable take-up 14 mm, 100 m
- Optional: Adler HY 24-SG (2x120 kN) double-drum-winch
  Max. cable take-up 14 mm, 130 m
  Adler HY 32 L-SG (2x160 kN) double-drum-winch
  Max. cable take-up 14 mm, 170 m

Crane:

- Series: Epsilon M70 F80
- For further cranes see crane brochure

Tyres:

- Series: 710 / 45 x 26,5 min. width: 2600 mm

By using tracks the min. width will change (+100 mm).
Other tyres on request.

Standard equipment:

- Grid and first rung demountable
- Last rung demountable and displaceable to loading length:
  (short) 2,4 m, 3,2 m and 3,65 m
  (long) 2,8 m, 3,6 m and 4,05 m
- Roller-block, high adjustable
- Cross section 3,3 m^2

Special equipment:

- Fear blade
- Clambunk with quick-change system
- Twin-rung as 2nd and 3rd rung on quick-change system
- Turnable rung
- Tiltable crane
- Tandem axle lift (Bogie lift) rear
- Other accessories on request

208F 11 t Kombi short

6 cylinder

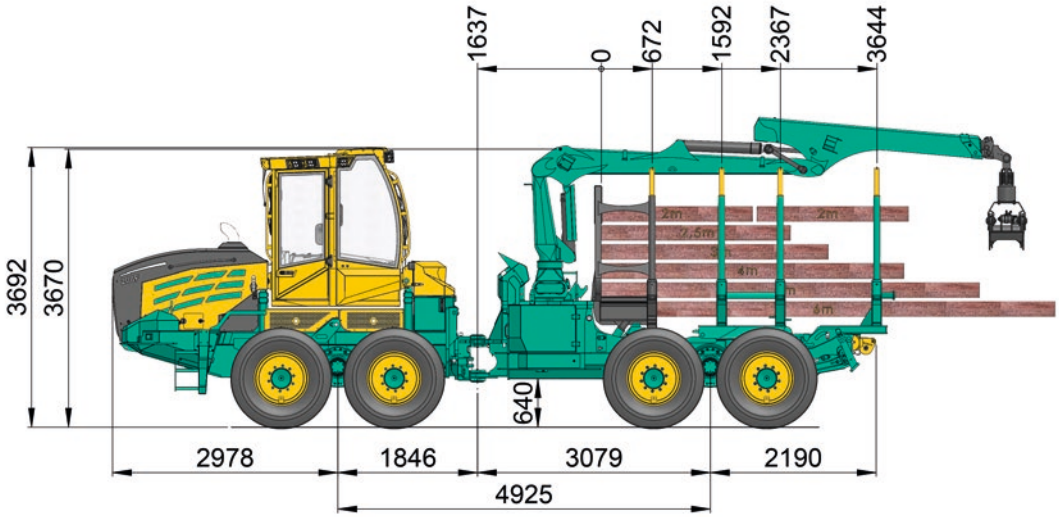

208F 11 t Kombi long

6 cylinder

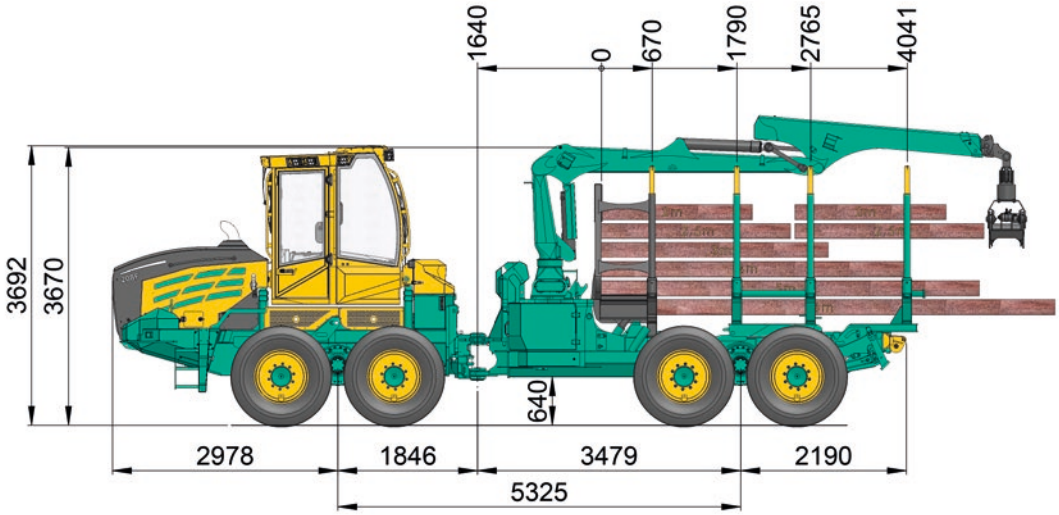

Weight Kombi short / long:

- from 19.600 kg / 19.800 kg

Load capacity:

- 11 t

Winches:

- Series: Adler HY 20 (2x100 kN) double-drum-winch
  Max. cable take-up 14 mm, 100 m
- Optional: Adler HY 24-SG (2x120 kN) double-drum-winch
  Max. cable take-up 14 mm, 130 m
  Adler HY 32 L-SG (2x160 kN) double-drum-winch
  Max. cable take-up 14 mm, 170 m

Crane:

- Series: Epsilon M70 F80
- For further cranes see crane brochure

Tyres:

- Series: 710 / 45 x 26,5 min. width: 2600 mm

By using tracks the min. width will change (+100 mm).
Other tyres on request.

Standard equipment:

- Grid and first rung demountable
- Last rung demountable and displaceable to loading length
  (short) 2,4 m, 3,2 m and 3,65 m
  (long) 2,8 m, 3,6 m and 4,05 m
- Roller-block, high adjustable
- Cross section 3,3 m²

Special equipment:

- Fear blade
- Clambunk with quick-change system
- Twin-rung as 2nd and 3rd rung on quick-change system
- Turnable rung
- Tiltable crane
- Tandem axle lift (Bogie lift) rear
- Other accessories on request

208F 14 t Kombi short

6 cylinder

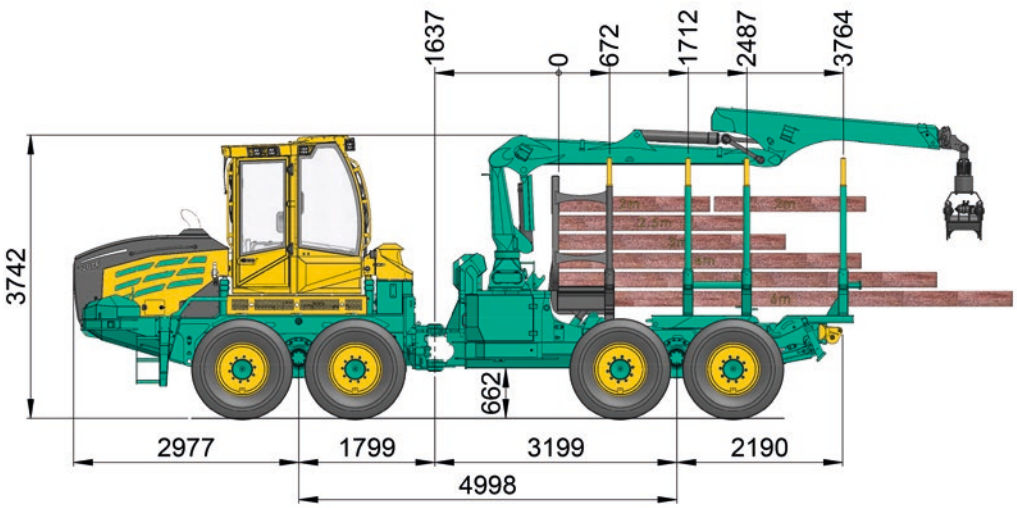

208F 14 t Kombi long

6 cylinder

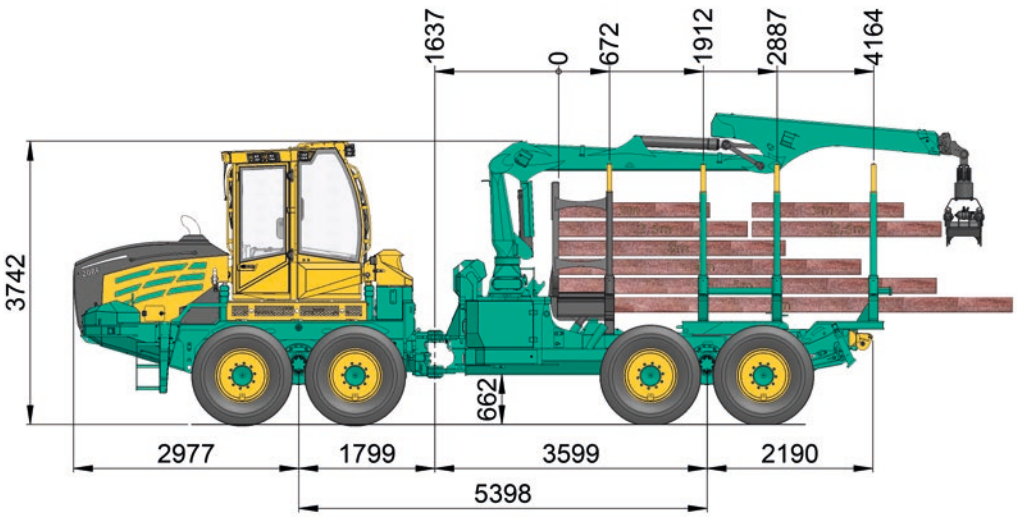

Weight Kombi short / long:

- 20.000 kg / 20.200 kg

Load capacity:

- 14 t

Winches:

- Series: Adler HY 20 (2x100 kN) double-drum-winch
  Max. cable take-up 14 mm, 100 m
- Optional: Adler HY 24-SG (2x120 kN) double-drum-winch
  Max. cable take-up 14 mm, 130 m
  Adler HY 32 L-SG (2x160 kN) double-drum-winch
  Max. cable take-up 14 mm, 170 m

Crane:

- Series: Epsilon M70 F80
- For further cranes see crane brochure

Tyres:

- Series: 710 / 45 x 26,5 min. width: 2850 mm

Standard equipment:

- Grid and first rung demountable
- Last rung demountable and displaceable to loading length:
  (short) 2,5 m, 3,3 m and 3,76 m
  (long) 2,9 m, 3,7 m and 4,16 m
- Height-adjustable roller block
- Cross section 3,8 m^2

Special equipment:

- Rear blade
- Clambunk with quick-change system
- Twin-rung as 2nd and 3rd rung on quick-change system
- Turnable rung
- Tiltable crane
- Tandem axle lift (Bogie lift) rear
- Other accessories on request

208F

BigFoot

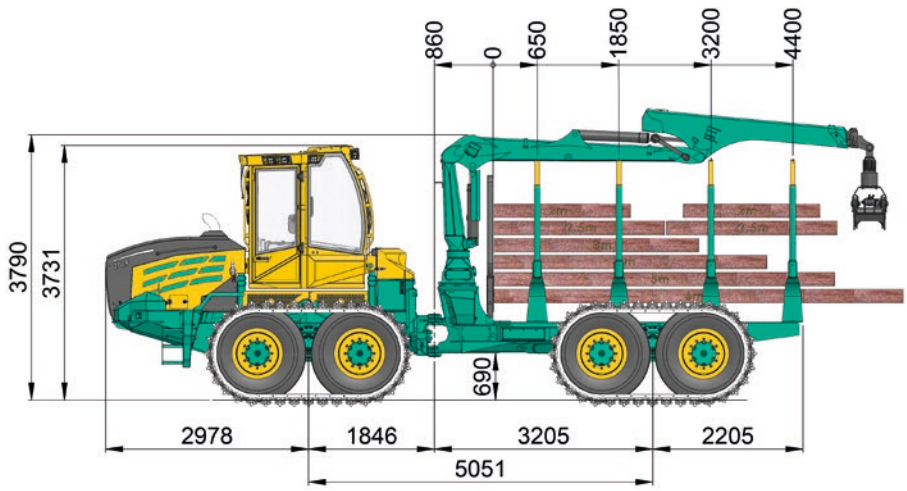

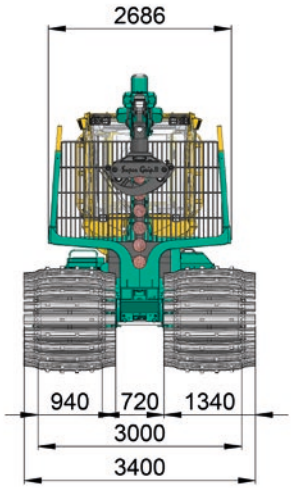

Engine:

- VOLVO PENTA
  TAD881VE EU Stage V
  Power: 185 kW (252 HP) from 1600 rpm
  Max. revolution: 1150 Nm from 1100 - 1500 rpm
  Max. torque: 1175 Nm at 1400 rpm
  Displacement: 7,7 liters

Optional:

- VOLVO PENTA
  TAD882VE EU Stage V
  Power: 210 kW (286 HP) from 1700 rpm
  Max. revolution: 1225 Nm from 1100 - 1600 rpm
  Max. torque: 1255 Nm at 1400 rpm
  Displacement: 7,7 liters

Transmission:

- NAF 2-speed transfer gearbox
- HSM High Speed Drive (71 series), 1st gear 0-14 km/h

Axles:

- NAF planetary axles
- Front: 100 % selectable differential lock
- Rear: 100 % selectable differential lock

Brake:

- 2-circuit brake, disk brake running in an oil bath
- Spring-loaded parking brake

Steering:

- Articulated steering with 2 cylinders
- 45° steering angle

Tyres:

	Size:	Total width
Series:	54 x 37-25	3000 mm

Tank capacity:

- Diesel: 190 l
- AdBlue: 45 l
- Hydraulic oil: 130 l

Hydraulic system:

- Load sensing
- Variable pump (working pump):
  flow rate: 304 l/min bei 1600 rpm
  pressure: up to max. 350 bar
- Hydraulic oil: saturated synthetic ester
  Panolin HLP SYNTH with Kleenoil
  Microfiltration; WGK 1

Cabin:

- Parallel pivoting cab
- ROPS, FOPS, OPS tested safety cab
- Swivel seat with pedals in the rear and the front
- Windscreen wipers in the front and the rear, optional side wipers
- Air cushioned seat with seat heating
- Hot water heating
- Air conditioner

Electrics / Instruments:

- HSM Ecommand colour display
- 5 driving programs + factory setting
- Diagnostics function and error display
- Graphical support for editing parameters
- 110 A (28 V) generator
- 2 maintenance-free dry-cell batteries, each with 75 Ah

Weight:

- 18.500 kg (series)
  Weight distribution: Front axle: 60 %
  Rear axle: 40 %

Torsion lock:

- 2 hydraulic cylinders

Loading crane:

- Series: Epsilon M70 F80
- For further cranes see crane brochure

Loading area:

- 4 bunks
- Length: 4400 mm
- Cross-section: 3,8 m² / Option 4,2 m²
- Payload: 11 t

Standard equipment:

- 4 LED-working headlight at cabin
- 4 working headlights at crane
- Potential transformer, radio with CD, fire extinguisher, first aid kit, warning triangle, tool kit, cooling box

Special equipment:

- Front dozer-blade
- Tandem axle lift (Bogie lift) front
- Single-drum winch 7 t
- Turnable rung, tiltable crane, quick-change system for rungs

208Z

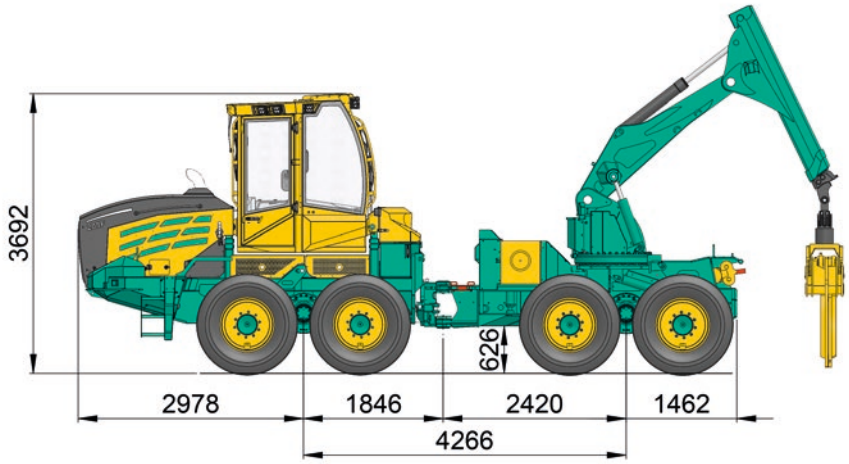

Engine:

- VOLVO PENTA
  TAD881VE EU Stage V
  Power: 185 kW (252 HP) from 1600 rpm
  Max. revolution: 1150 Nm from 1100 - 1500 rpm
  Max. torque: 1175 Nm at 1400 rpm
  Displacement: 7,7 liters

Optional:

- VOLVO PENTA
  TAD882VE EU Stage V
  Power: 210 kW (286 HP) ab 1700 rpm
  Max. revolution: 1225 Nm von 1100 - 1600 rpm
  Max. torque: 1255 Nm bei 1400 rpm
  Displacement: 7,7 liters

Transmission:

- NAF 2-speed transfer gearbox
- HSM High Speed Drive (71 series), 1st gear 0-14 km/h

Brake:

- Brake with 2-circles, oil-cooled multiple-disc power-brake
- Spring accumulator - parking brake

Steering:

- Articulated frame steering with 2 cylinders
- 45° steering angle

Hydraulic system:

- Load sensing
- Variable pump (working pump):
  flow rate: 304 l/min bei 1600 rpm
  pressure: up to max. 350 bar
- Hydraulic oil: saturated synthetic ester
  PanolinHLP SYNTH with Kleenoil
  Microfiltration; WGK 1

Tank capacity:

- Diesel: 190 l
- AdBlue: 45 l
- Hydraulic oil: 130 l

Winches:

- Serie: Adler HY 20-SG (2 x 100 kN) double-drum-winch
  Max. cable take-up 14 mm, 100 m
- Optional: Adler HY 24-SG (2 x 120 kN) double-drum-winch
  Max. cable take-up 14 mm, 130 m
  Adler HY 32-SG (2 x 160 kN) double-drum winch
  Max. cable take-up 14 mm, 130 m

Weight:

- 20.000 kg (series)

Cabin:

- Raisable to side on parallel linkages
- ROPS, FOPS, OPS tested
- Rotary seat with pedals in front and rear
- Wiper in front and rear, optional on the side
- Air cushioned seat with seat heating
- Hot-water heating
- Air conditioning

Electrics / Instruments:

- HSM Ecommand colour-display
- 5 operator programs + factory setting
- Diagnosis-tool and error-indication
- Graphic support at parameter editing
- Generator 110 A (28 V)
- 2 service-free dry batteries á 75 Ah

Standard equipment:

- 14 LED-working headlight at cabin
- 4 working headlights at crane
- Reversing camera with color monitor
- Rear headlights
- Potential transformer 24 V - 12 V
- Radio with CD, fire extinguisher, first aid kit, warning triangle, tool kit, cooling box
- Twist lock with 2 hydraulic cylinders

Special equipment:

- Front dozer-blade
- Straight shield with sprag brake
- Hydraulically height-adjustable roller block
- Tandem axle lift (Bogie lift) in front and rear
- „Skidder France" version pulley
- Auxiliary heating
- Radio control for winch
- Drive by radio
- Sun blinds
- Hydraulic oil preheating
- Cab suspension
- Other accessories on request

Crane:

- Articulated arm with double telescope: 7,3 m range
- Lifting moment gross: 260 kNm
- Slewing angle: 255°
- Slewing torque: 80 kNm
- Gripper cross-section: 1,2 m^2
- Optional: HSM S3 - 7.5 7,3 m range
  HSM S3 - 8.4 8,4 m range
  HSM S3 - 10 9,7 m range

208F 20 t

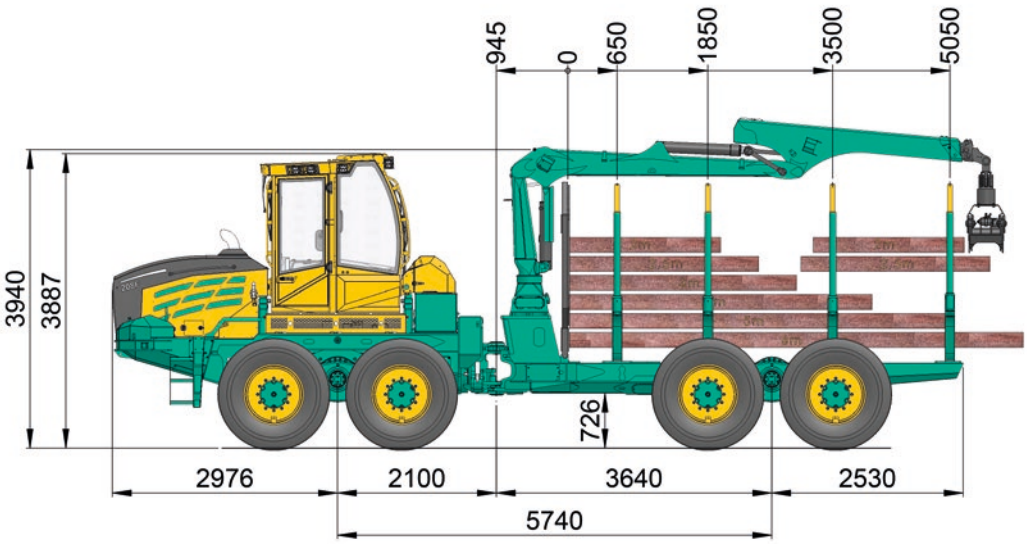

Engine:

- VOLVO PENTA
  TAD882VE EU Stage V
  Power: 210 kW (286 HP) from 1700 rpm
  Max. revolution: 1225 Nm from 1100 - 1600 rpm
  Max. torque 1255 Nm at 1400 rpm
  Displacement: 7,7 liters

Optional:

- VOLVO PENTA
  TAD884VE EU Stage V
  Power: 250 kW (340 HP) from 1800 rpm
  Max. revolution: 1330 Nm from 1200 - 1800 rpm
  Max. torque 1360 Nm at 1400 rpm
  Displacement: 7,7 liters

Transmission:

- NAF 2-speed transfer gearbox
- HSM High Speed Drive (71 series), 1st gear 0-14 km/h

Axles:

- NAF planetary axles
- Front: 100 % selectable differential lock
- Rear: 100 % selectable differential lock

Brake:

- 2-circuit brake, disk brake running in an oil bath
- Spring-loaded parking brake

Steering:

- Articulated steering with 2 cylinders
- 45° steering angle

Tyres:

	Size:	Total width
Series:	750/55-26,5	3000 mm

Tank capacity:

- Diesel: 220 l + 65 l
- AdBlue: 45 l
- Hydraulic oil: 170 l

Hydraulic system:

- Load sensing
- Variable pump (working pump):
  flow rate: 304 l/min at 1600 rpm
  pressure: up to max. 350 bar
- Hydraulic oil: saturated synthetic ester
  Panolin HLP SYNTH with Kleenoil
  Microfiltration; WGK 1

Cabin:

- Parallel pivoting cab
- ROPS, FOPS, OPS tested safety cab
- Swivel seat with pedals in the rear and the front
- Windscreen wipers in the front and the rear, optional side wipers
- Air cushioned seat with seat heating
- Hot water heating
- Air conditioner

Electrics / Instruments:

- HSM Ecommand colour display
- 5 driving programs + factory setting
- Diagnostics function and error display
- Graphical support for editing parameters
- 110 A (28 V) generator
- 2 maintenance-free dry-cell batteries, each with 75 Ah

Weight:

- 21.800 kg (series)
  Weight distribution: Front axle: 60 %
  Rear axle: 40 %

Torsion lock:

- 2 hydraulic cylinders

Loading crane:

- Series: Epsilon M70 F80
- For further cranes see crane brochure

Loading area:

- 4 bunks
- Length: 4400 mm
- Cross-section: 4,9 m² / Option 4,2 m²
- Payload: 20 t

Standard equipment:

- 4 LED-working headlight at cabin
- 4 working headlights at crane
- Potential transformer, radio with CD, fire extinguisher, first aid kit, warning triangle, tool kit, cooling box

208H2

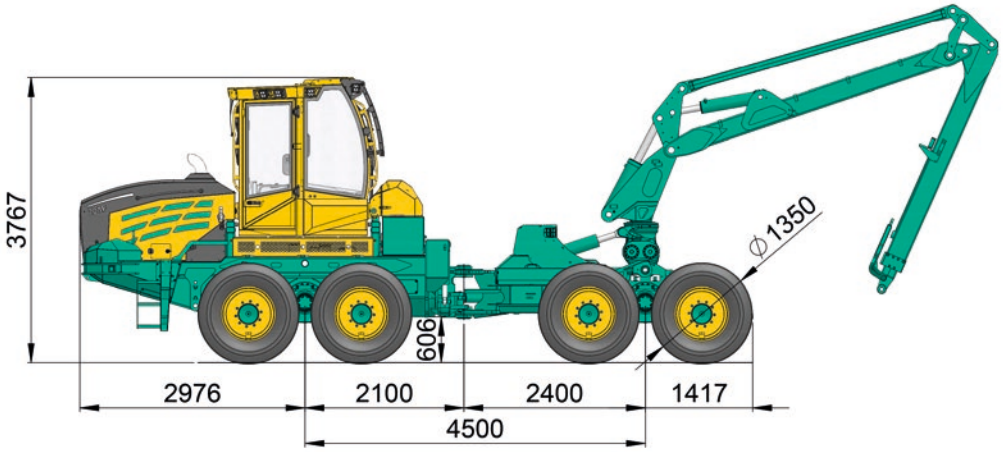

Engine:

- VOLVO PENTA
  TAD882VE EU Stage V
  Power: 210 kW (286 HP) from 1700 rpm
  Max. revolution: 1225 Nm from 1100 - 1600 rpm
  Max. torque: 1255 Nm at 1400 rpm
  Displacement: 7,7 liters

Transmission:

- NAF 2-speed transfer gearbox
- HSM High Speed Drive (71 series), 1st gear 0-14 km/h

Axles:

- NAF planetary axles
- Front: 100 % selectable differential lock
- Rear: 100 % selectable differential lock

Brake:

- 2-circuit brake, disk brake running in an oil bath
- Spring-loaded parking brake

Steering:

- Articulated steering with 2 cylinders
- 45° steering angle

Tyres:

	Size:	Total width:
Series:	710/45-26,5	3000 mm

Tank capacity:

- Diesel: 220 l + 65 l
- AdBlue: 45 l
- Hydraulic oil 170 l

Hydraulic system:

- Load sensing
- Variable pump (working pump):
  flow rate: 304 l/min at 1600 rpm
  pressure: up to max. 350 bar
- Hydraulic oil: saturated synthetic ester
  Panolin HLP SYNTH with Kleenoil
  Microfiltration; WGK 1

Cabin:

- Parallel pivoting cab
- ROPS, FOPS, OPS tested safety cab
- Swivel seat with pedals in the rear and the front
- Windscreen wipers in the front and the rear, optional side wipers
- Air cushioned seat with seat heating
- Hot water heating
- Air conditioner

Crane:

- Mesera M221 H100 / H110
  Range: 10 m / 11 m
  Lifting moment gross: 188 kNm
  Slewing torque: 43,6 kNm
  Tiltable: +24°/-30°

Optional:

- Mesera M240 H103 / H111
  Range: 10,3 m / 11,1 m
  Lifting moment gross: 240 kNm
  Slewing torque: 54 kNm
  Tiltable: +22°/-30°

Aggregate:

- Logmax 6000
  Felling diameter: 650 mm
  Delimbing diameter: 500 mm
  Max. feed force: 26,9 kN
  Max. feed force speed: 4,2 m/s
  Max. operating pressure: 280 bar
  Weight: 1.330 kg
- Control: LOG Mate
- Other aggregates on request

Electrics / Instruments:

- HSM Ecommand colour display
- 5 driving programs + factory setting
- Diagnostics function and error display
- Graphical support for editing parameters
- 110 A (28 V) generator
- 2 maintenance-free dry-cell batteries, each with 75 Ah

Weight:

- 20.800 kg (series)
  Weight distribution: Front axle: 60 %
  Rear axle: 40 %

Torsion lock:

- 2 hydraulic cylinders

Standard equipment:

- 4 LED-working headlight at cabin
- 4 working headlights at crane
- Potential transformer, radio with CD, fire extinguisher, first aid kit, warning triangle, tool kit, cooling box